SITE 1101: Principles of Information Systems

Team Project: How does hardware work?

With great power comes melted LED.
~ Uncle Ben[1]

You will construct basic logic gates using transistors and other electronic components. You are assigned to a team of 4 ± 1 students. Please **choose a team leader** before starting the project. Team management issues should be communicated to instructors early on. When writing emails, **include all team members and co-instructor(s) in CC**. For general questions, use Blackboard Discussion.

Check time slots that are free in the **B013** (Robotics Lab) in the visits schedule: https://adauniversity-my.sharepoint.com/:x:/g/personal/ishahaliyev_ada_edu_az/IQDwrzfOY1z_QKRqHH1GqxLxAbAYIWUkOuTQ8_R6FND9ygg

- Choose and **agree with your team** time slots for your **3 lab visits**. Visit the Lab and meet Mr. Nariman Vahabli (nvahabli@ada.edu.az), Lab Coordinator (LC) there to **book those time slots** for your team.
- There are a limited number of work desks, so each team will be able to spend only limited time in the lab i.e. **3 visits, 1 hour each**. You cannot have all 3 visits on one day. Make sure **every team member** participate in **at least 2 lab visits**.

Demonstrate engineering culture of keeping your workplace **tidy and functioning**.

- After each lab visit you will clean and tidy up your work desk e.g. recycle all used items (e.g. draft paper or plastic bottles), return all the furniture to the previous position. Make sure you **disassemble** and **put back into the kit box** all electronic elements.
- Work in the designated area i.e. at the assigned work desk in the Net Lab. You are not allowed to take any parts outside of this area. For any related logistical **emergency** email the LC immediately, and put your instructor(s) on copy CC.
- LC will note down the inventory ID number for the **kit box** you received, start and finish time of your visit, and will check if the elements are intact.
- **Important:** You cannot start working before the LC checked you in, and leave the lab before the LC checked you out.

Follow major safety measures. There are the Electrical Safety Rules for our labs. A few important points:

- Make sure you **do not connect** the LED directly to the power source without a resistor added.
- **Disconnect the power source** before servicing or repairing electrical equipment. Do not make circuit changes or perform any wiring when power is on. Do your wiring, setup, and a careful circuit checkout before applying power.
- **Do not wear** loose-fitting clothing or jewelry in the lab. Rings and necklaces are usually excellent conductors in contact with your skin.

[1] Read about the actual quote in this wikipedia page.

- After finishing experiments, make sure the work area is **clean** and ready for other people to use.
- **Do not move any of the equipment** from their place or out of any of the labs.
- **No food or drinks** are allowed in the lab. Sealed bottles of water are acceptable, but are to be kept as far away from live circuits as possible.
- No "horseplay" i.e. pushing and hitting each other, or behaving in a silly way in the labs.

Construct and test three basic logic gates using the following parts in the kit box:

- Solderless breadboard - 1 piece
- Power supply module - 1 piece
- Resistor (330 Ohm) - 1 piece
- Small pushbutton - 2 pieces
- Resistor (2,000 Ohm) - 3 pieces
- NPN transistor (PN2222) - 3 pieces
- Light-emitting diode (LED) - 3 pieces
- Jumper wire - 11 pieces

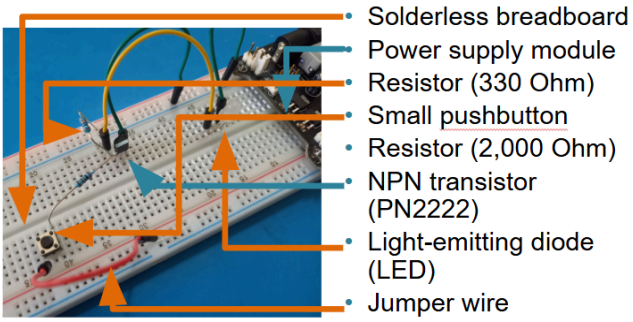

Watch the video about constructing an 8-bit adder (https://youtu.be/X31B1pVow1o) together with your team and note down the explanations of schematics for NOT-, AND- and OR-gates. Come prepared with a clear idea about the circuit(s) you are to build.

Start with the easy **NOT-gate**, which can be built as per the scheme below:

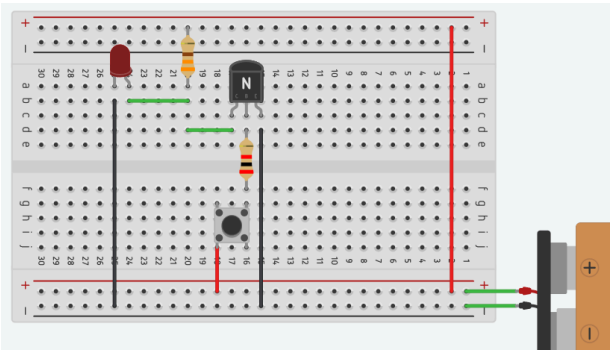

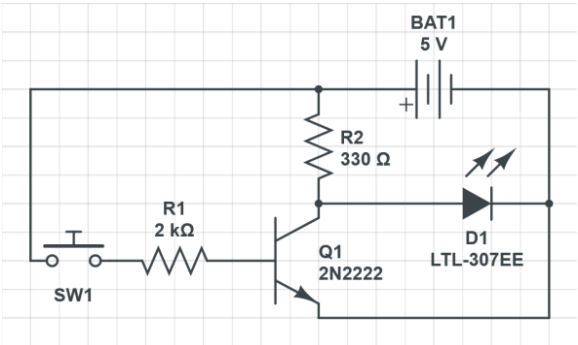

Continue with the **AND**- and the **OR-gate** that can be built as per the schemes below:

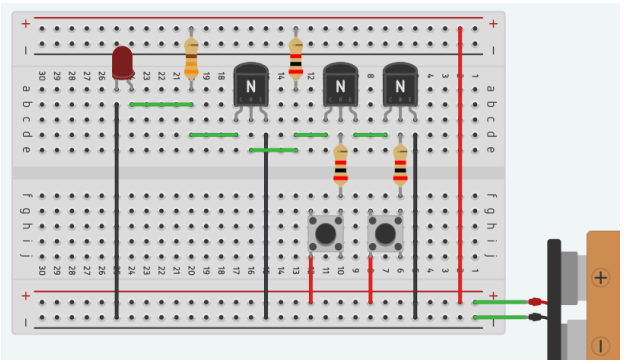

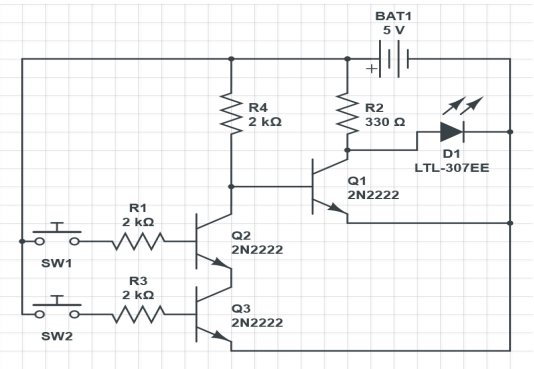

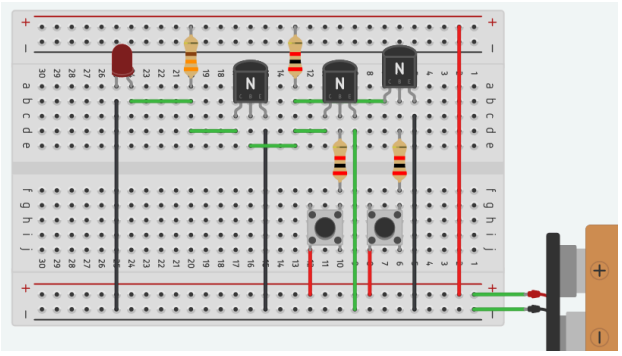

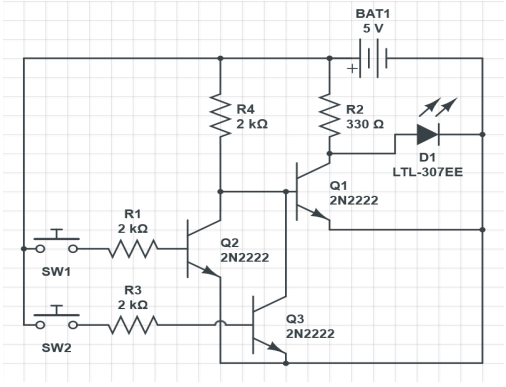

Record video which demonstrates the construction of gates from scratch by team members. After lab sessions, edit your video showing the construction process and the final output by all team members. One or more team members can narrate the steps and explain **why** the logic gates work and **how** they are constructed. Share the video with tags #LogicGates #SITE1101 #ADAUniversity on Youtube (optionally also on other social media). The most interesting videos will be eligible for **10% bonus.** **Note:** If music is used, use copyright free music so that Youtube won't block the video. Optionally, upload to Vimeo or Dailymotion as a backup. You can find exemplary project videos on the course website: https://ada-site.github.io/SITE-1101/projects/01_project/

Two more **10% bonuses** are possible. For that, construct a:

- **NAND-gate** using 2 breadboards with one AND- and one NOT-gate by collaborating with one more team.
- **XOR-gate** using 2 more breadboards with one AND- and one OR-gate in addition to the Bonus 1 circuit by cooperating with three other teams.

Submit a Microsoft Docx file to blackboard before deadline with the following information:

1. Title (e.g. SITE 1101 Team Project 1)
2. Team allocation table as shown below. Contribution percentages must be fair and correspond to reality. For well-managed teams, difference is usually maximum of 10%.[2]

Team N	Contribution (%)	What was done?
Team Member 1 (Team Leader)	25	Detailed description of the work contributed.
Team Member 2	25	Detailed description of the work contributed.
Team Member 3	25	Detailed description of the work contributed.
Team Member 4	25	Detailed description of the work contributed.

3. **Link to Youtube video(s)** (as a full link: i.e. www.youtube.com/...).
4. Teams you collaborated with (in case of bonus attempt).
5. Optionally, any other notes you would like to inform about.

[2] If a team member doesn't contribute, their contribution is 0%. You must inform your instructors about it as soon as possible by following the communication rules.

The **grading rubric** is as follows[3]:

Item	0%	25%	50%	75%	100%	Max Points
Youtube video shows the construction process with all team members and explains step-by-step why the constructed logic gates work.	No video, link doesn't work, or a very bad video.	Explanation by team members exists but no construction process is shown.	Construction process by contributed team members is there, but the explanation is unclear / we are not sure if the logic gates work.	Construction process and clear explanation is there, but the solution is incomplete (e.g. one logic gate is missing, team members aren't there, etc)	Construction process by contributed team members and a clear, step-by-step explanation of all three basic logic gates are demonstrated.	8
Submission format corresponds to the instruction requirement.	Incorrect file format.		Lacks a required item, such as team allocation table.	.	The file format is right, everything is complete, tidy and clear.	2
Bonus 1: Video quality	Low-quality, boring video.		There was some attempt to make the video engaging.		Video is high-quality and, interesting.	1
Bonus 2: NAND-gate	No video, link doesn't work, or a very bad video.		Video explanation with team members is unclear / we are not sure if the logic gate works.		Nice collaboration with another team, with clear demonstration/explanation of the constructed gate. Construction process is clearly shown and explained by team members.	1
Bonus 3: XOR-gate	No video, link doesn't work, or a very bad video.		Video explanation with all team members is unclear / we are not sure if the logic gate works.		Nice collaboration with other teams, with clear demonstration/explanation of the constructed gate. Construction process is clearly shown and explained by team members.	1

When submitting, make sure to **consider video upload time** and other logistical issues. Deadline policy is noted in the syllabus. **Good luck!**

[3] Rubric is supplementary to the requirements noted in the document previously. If the project is fulfilling neither requirement in the closest proximity, it may receive an average value. For example, if your project is neither fully complete (100%) nor worth the 75% criterion, then you may receive 87.5%.